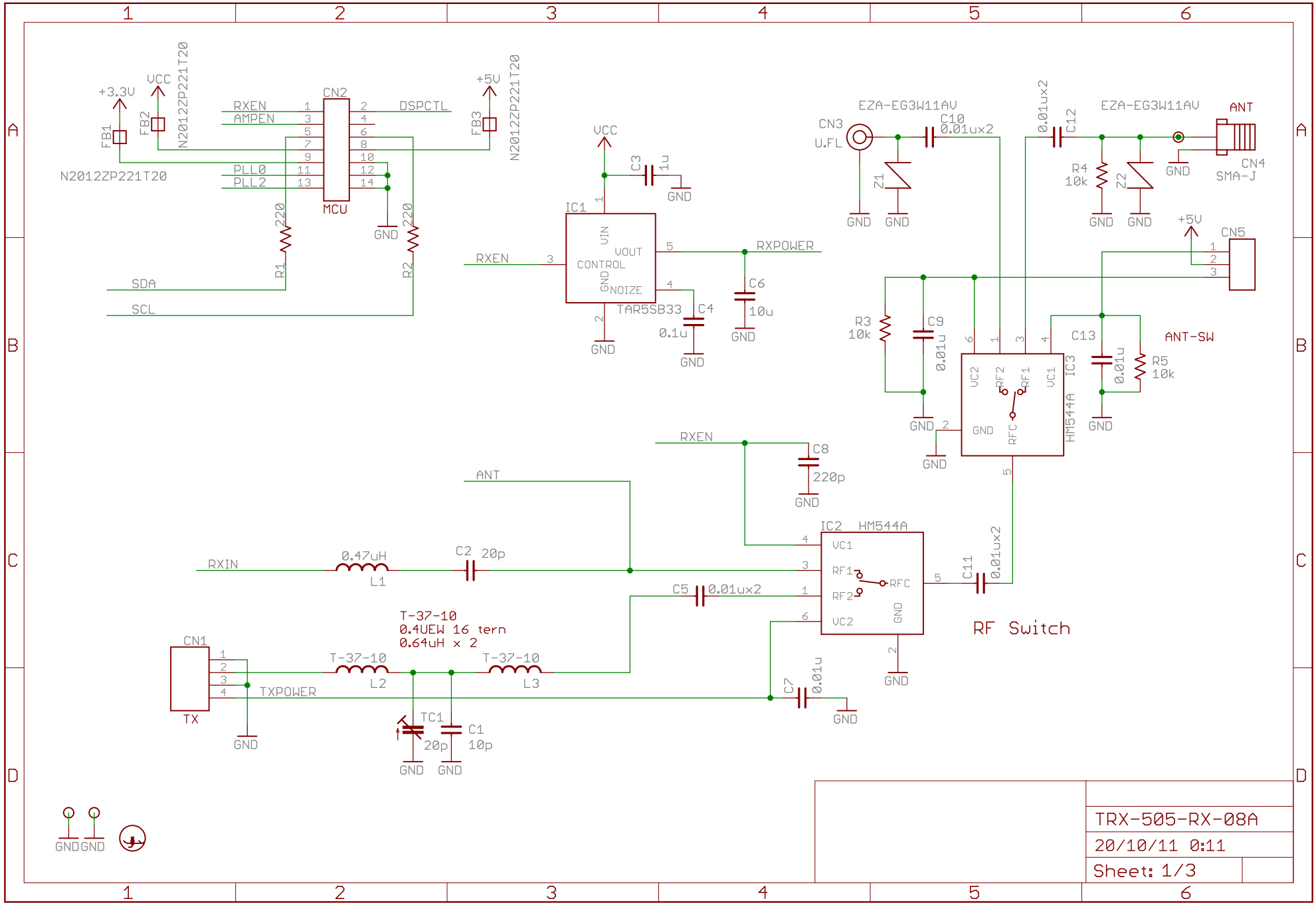
+3.3V
VCC
FB1
FB2
N2012ZP221T20
N2012ZP221T20
CN2
RXEN
AMPEN
PLL0
PLL2
DSPCTL
MCU
GND
R1
220
R2
220
SDA
SCL
+5V
FB3
N2012ZP221T20
VCC
C3
1u
GND
IC1
VIN
VOUT
CONTROL
GND
NOIZE
TAR5SB33
RXEN
RXPOWER
C4
0.1u
C6
10u
GND
EZA-EG3W11AV
CN3
U.FL
C10
0.01ux2
Z1
GND
GND
0.01ux2
C12
EZA-EG3W11AV
ANT
CN4
SMA-J
R4
10k
Z2
GND
GND
GND
+5V
CN5
R3
10k
C9
0.01u
C13
0.01u
R5
10k
ANT-SW
IC3
HM544A
VC2
RF2
RF1
VC1
GND
RFC
RXEN
C8
220p
GND
ANT
IC2 HM544A
VC1
RF1
RFC
RF2
VC2
GND
C11
0.01ux2
RF Switch
RXIN
0.47uH
L1
C2 20p
C5 0.01ux2
T-37-10
0.4UEW 16 tern
0.64uH x 2
CN1
TX
T-37-10
L2
T-37-10
L3
TXPOWER
C7
0.01u
TC1
20p
C1
10p
GND
GND
GND
GND
GND
GND
TRX-505-RX-08A
20/10/11 0:11
Sheet: 1/3

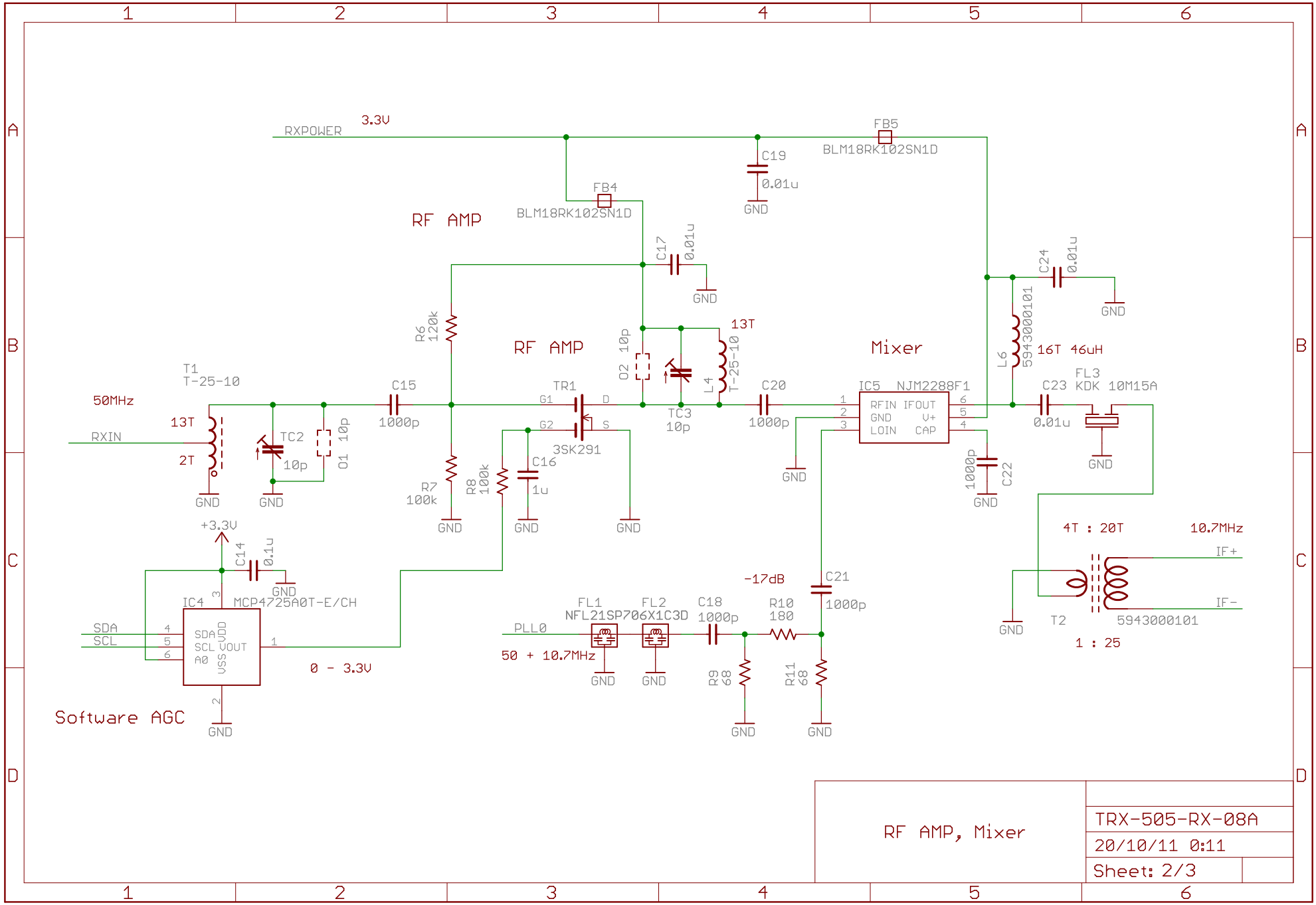

RF AMP, Mixer

TRX-505-RX-08A

20/10/11 0:11

Sheet: 2/3

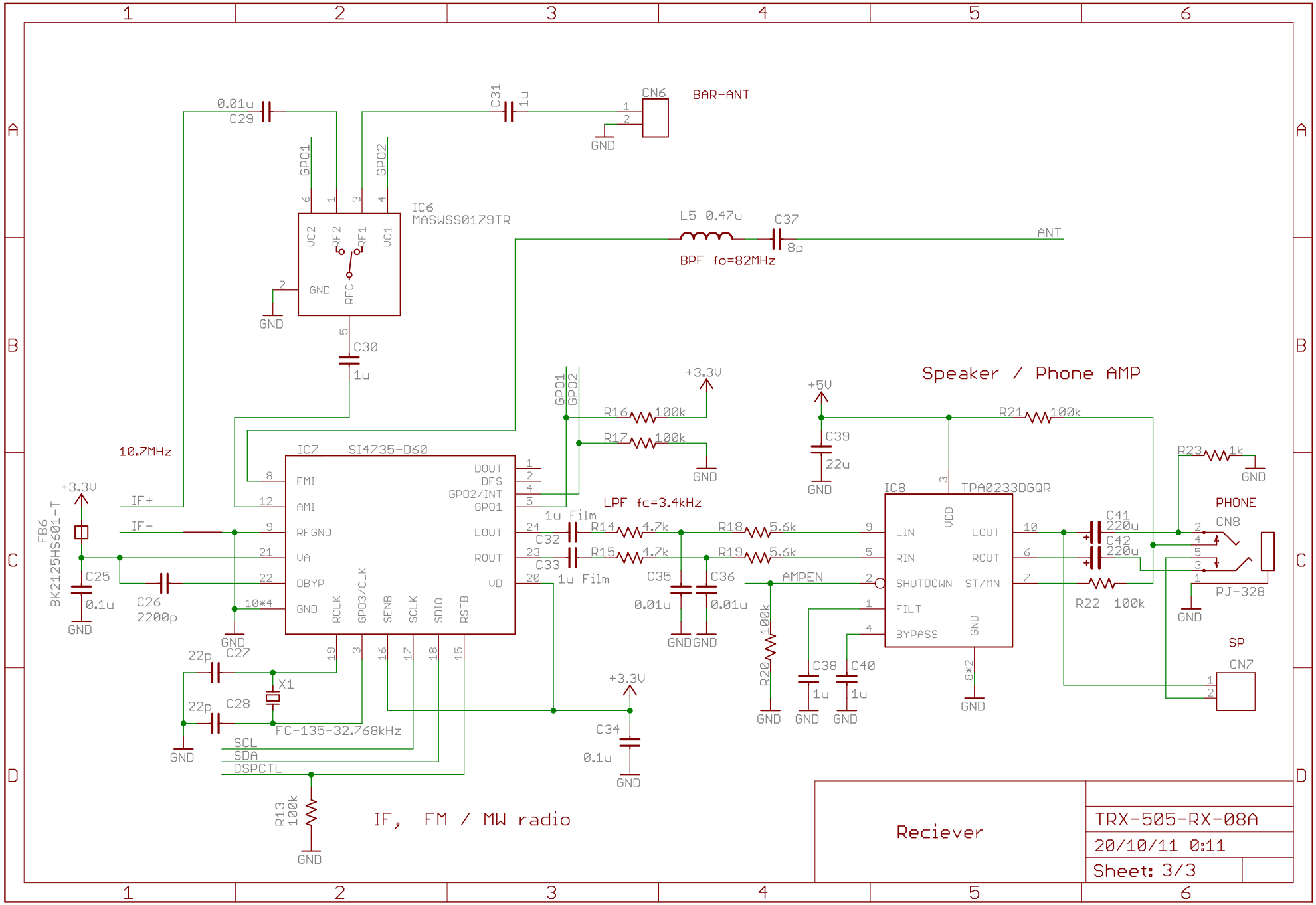
BAR-ANT
CN6
C31 1u
0.01u C29
GPO1
GPO2
IC6 MASWSS0179TR
VC2 RF2 RF1 VC1
GND RFC
C30 1u
L5 0.47u
C37 8p
ANT
BPF fo=82MHz
Speaker / Phone AMP
+3.3V
+5V
R16 100k
R17 100k
R21 100k
C39 22u
R23 1k
10.7MHz
IC7 SI4735-D60
FMI AMI RFGND VA DBYP GND
DOUT DFS GPO2/INT GPO1 LOUT ROUT VD
RCLK GPO3/CLK SENB SCLK SDIO RSTB
IF+
IF-
FB6 BK2125HS601-T
C25 0.1u
C26 2200p
LPF fc=3.4kHz
1u Film C32
1u Film C33
R14 4.7k
R15 4.7k
R18 5.6k
R19 5.6k
C35 0.01u
C36 0.01u
AMPEN
IC8 TPA0233DGQR
LIN RIN SHUTDOWN FILT BYPASS
VDD LOUT ROUT ST/MN GND
C41 220u
C42 220u
R22 100k
PHONE
CN8
PJ-328
SP
CN7
R20 100k
C38 1u
C40 1u
22p C27
22p C28
X1
FC-135-32.768kHz
C34 0.1u
SCL
SDA
DSPCTL
R13 100k
IF, FM / MW radio
Reciever
TRX-505-RX-08A
20/10/11 0:11
Sheet: 3/3